4,525 DWT / gearless

BRIESE SCHIFFAHRT

Vessel name	Built	IMO no.	Flag	Vessel name	Built	IMO no.	Flag
Cimbris	09/2003	9281786	Gibraltar	Nordersand	11/2004	9289790	Gibraltar
Ditzum	11/2005	9323651	Gibraltar	Randzel	08/2006	9195482	Gibraltar

Ship`s Basics

Type	General Cargo Vessel Tweendecker
Builder	Rousse Shipyard, Bulgaria
Classification	GL + 100 A5 E3 G + MC E3 AUT equipped for carriage of containers, strengthened for heavy cargoes, SOLAS II - 2 Reg. 54

Dimensions & Main Data

Tonnage GT/NT	3,173 / 1,725
Deadweight (summer)	4,525 mt
Length o.a.	98.90 m
Length p.p.	92.50 m
Beam	13.80 m
Max. draft (summer)	5.74 m
Max. speed	13.9 knots
Service speed	12.2 knots
Consumption at sea	10.4 mt fuel per day
Consumption in port	0.7 mt fuel per day
Fuel on ME	RME 180 / MGO DMA / MDO DMB
Fuel on AE	MGO DMA
Tank capacities	RME 180 abt. 275 cbm MGO DMA / MDO DMB abt. 65 cbm Ballast abt. 1,865 cbm Freshwater abt. 42 cbm

Propulsion

Main Engine	MaK 6M32C, 2880 kW
Aux.-Engines	Caterpillar (Ditzum), 2 x 260 kW Caterpillar (Nordersand), 2 x 215 kW Caterpillar (Randzel), 2 x 280 kW Caterpillar (Cimbris), 2 x 160 kW
Propeller	Controllable pitch propeller

Hold and Hatch

Hold and Hatch	1 Hold / 1 Hatch
Hatch cover type	Pontoon type
Cargo hold capacity	5,720 cbm (202,000 cbft)
Floor space under deck	1,490 sqm (16,038 sqft)
Floor space on deck	790 sqm (8,503 sqft)
Deck strengths per sqm	15.00 mt on tanktop 2.50 mt on tweendeck 1.68 mt on deck
Tweendeck	1 height
Bulkheads	2 bh / 9 positions

Container Capacity

Capacity	20´ or 40´ + 20´
Hold	120 / 48 / 24
Deck	162 / 75 / 12
Total	282 / 123 / 36
TEU at 14 mt	152
Reeferplugs	20 on deck
Stackload	20‘ / 40‘
Tanktop	72 mt / 91.5 mt
Deck	25 mt / 35 mt

Special Equipment / Features

IMO classes	Fitted for carriage of dangerous goods of all IMO classes
Other	Fitted for grain, timber, solid bulks Bow thruster; Shaft Generator

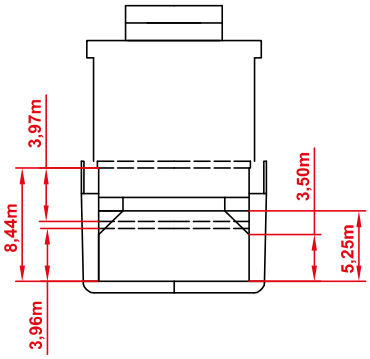

Side View

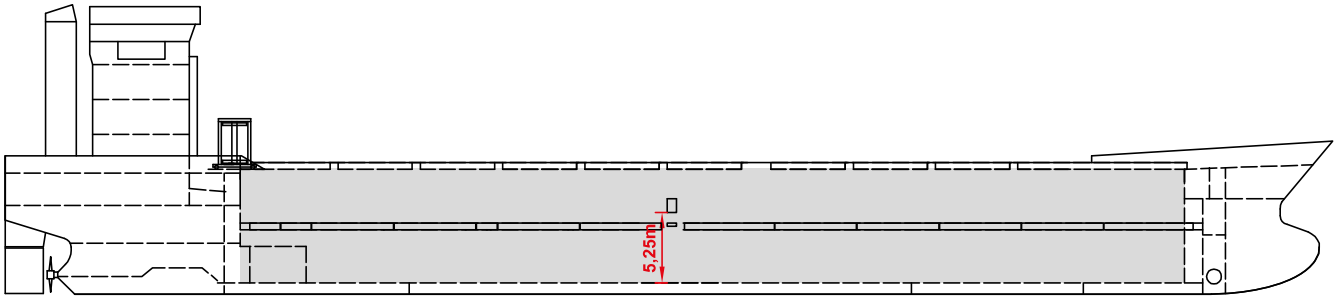

Main Deck

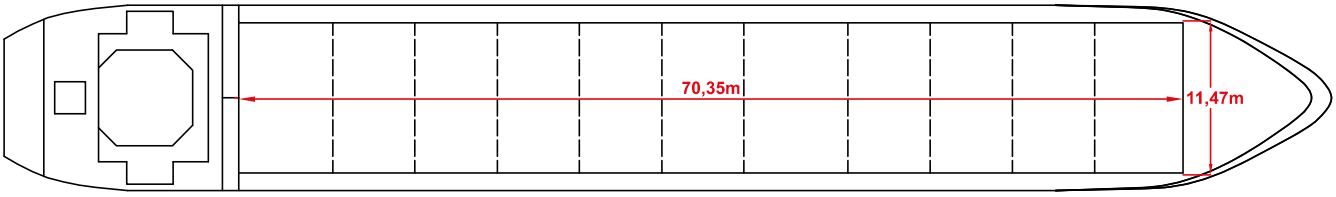

Tweendeck

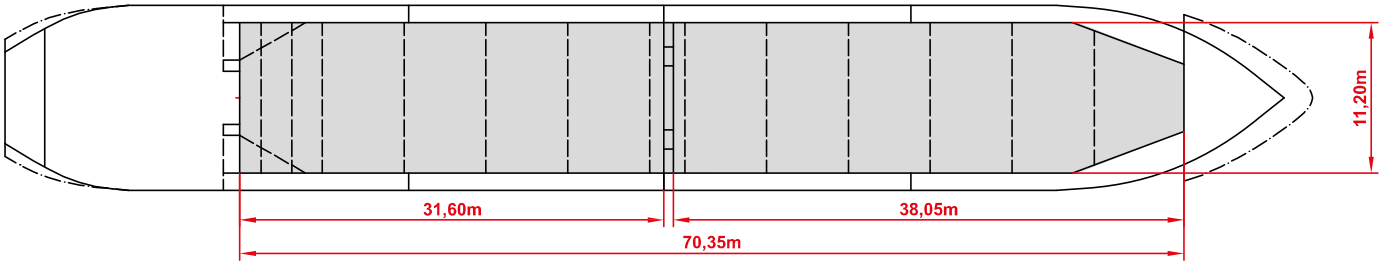

Hold & Double Bottom

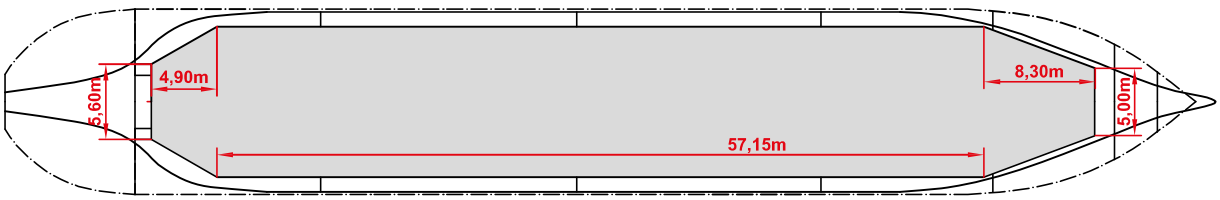

Max. speed is calculated basis 85% MCR, ballast condition, no deck cargo, maximum Beaufort 2, no swell, no adverse currents, clean hull and even keel. Service Speed and consumption at sea is calculated basis 75% MCR, laden condition, no deck cargo, maximum Beaufort 2, no swell, no adverse currents, clean hull and even keel. Eco speed is the minimum continuous speed in laden condition. Consumption data assumes reefer plugs and shaft generator disconnected but including AE if no shaft generator is installed. Vessel is burning fuel according to ISO 8217. Intake is always subject to vessel's stability, trim, permissible weights and is subject to regulations of visibility. Lifting capacity of vessel's cranes is subject to vessel's stability and can depend on cargo/ ballast on board. Container data as well as bale capacity assumes tweendeck ashore. All details including speed and consumption are given in good faith and are "about" and are given without guarantee. They must not be used as basis for charterparties or contracts without owner's explicit written authority.